Cambridge Assessment International Education

Cambridge IGCSE™ (9–1)

PHYSICS **0972/21**

Paper 2 Multiple Choice (Extended) **October/November 2021**

45 minutes

You must answer on the multiple choice answer sheet.

You will need: Multiple choice answer sheet
Soft clean eraser
Soft pencil (type B or HB is recommended)

INSTRUCTIONS

- There are **forty** questions on this paper. Answer **all** questions.
- For each question there are four possible answers **A**, **B**, **C** and **D**. Choose the **one** you consider correct and record your choice in soft pencil on the multiple choice answer sheet.
- Follow the instructions on the multiple choice answer sheet.
- Write in soft pencil.
- Write your name, centre number and candidate number on the multiple choice answer sheet in the spaces provided unless this has been done for you.
- Do **not** use correction fluid.
- Do **not** write on any bar codes.
- You may use a calculator.
- Take the weight of 1.0 kg to be 10 N (acceleration of free fall = 10 m / s^2).

INFORMATION

- The total mark for this paper is 40.
- Each correct answer will score one mark.
- Any rough working should be done on this question paper.

This document has **16** pages.

IB21 11_0972_21/FP
© UCLES 2021

[Turn over

www.root19.com +91 - 9969 353 391

1 Which instrument is most suitable for measuring the thickness of a single sheet of paper?

A 15 cm rule

B balance

C metre rule

D micrometer screw gauge

2 The diagrams show distance–time graphs for four objects.

Which graph represents an object moving with an increasing speed?

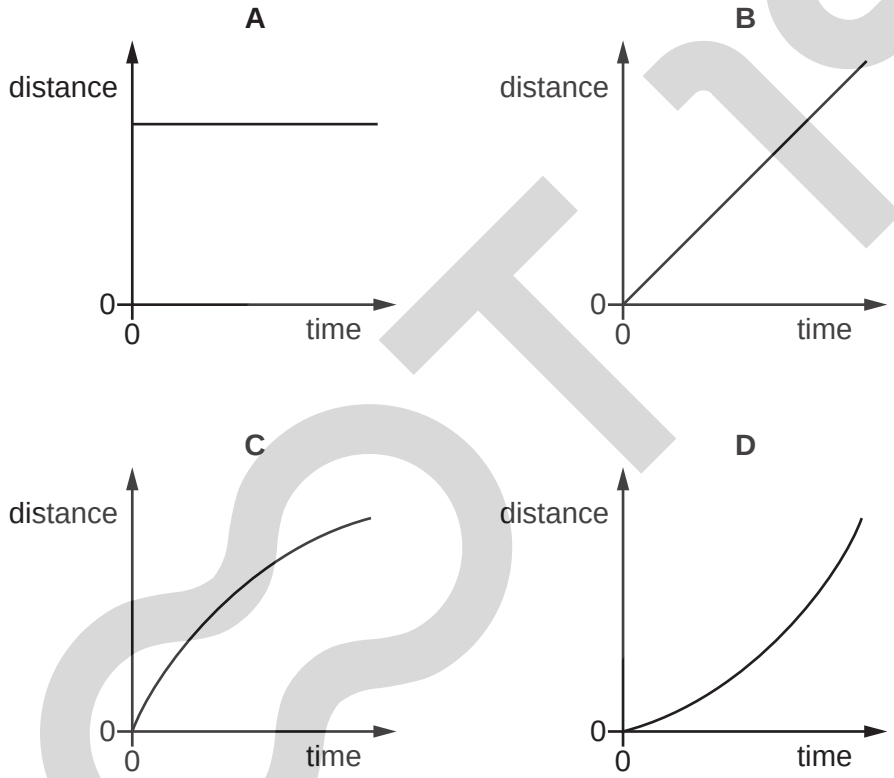

3 An object has a weight of 6.4 N on the Earth where the gravitational field strength is 10 N / kg.

Which row states the mass and the weight of the object on the Moon where the gravitational field strength is 1.6 N / kg?

	mass / kg	weight on the Moon / N
A	0.64	1.0
B	0.64	6.4
C	4.0	1.0
D	4.0	6.4

© UCLES 2021
www.root19.com

+91 - 9969 353 391

4 Which substance in the table has the lowest density?

	substance	mass / g	volume / cm^3
A	nylon	1.2	1.0
B	cotton	1.5	1.0
C	olive oil	1.8	2.0
D	water	2.0	2.0

5 A 20 m long, uniform bridge of weight 100 kN is supported at each end by pillars, as shown.

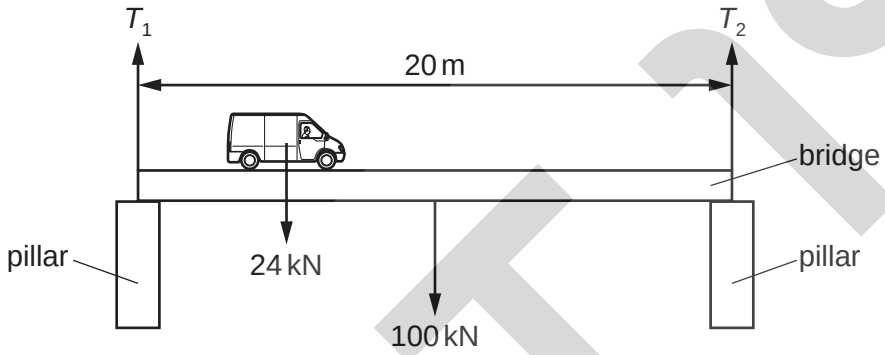

The pillars exert forces T_1 and T_2 on the ends of the bridge.

What are the values of T_1 and T_2 when a van of weight 24 kN is on the bridge, 5 m from the left-hand pillar?

	T_1 / kN	T_2 / kN
A	56	68
B	62	62
C	68	56
D	74	50

6 A spring, which obeys Hooke's law, has an unstretched length of 10 cm.

A load of 20 N is suspended from the spring.

The new length of the spring is 36 cm.

What is the spring constant k of the spring?

A 0.56 N / cm **B** 0.77 N / cm **C** 1.3 N / cm **D** 1.8 N / cm

www.root19.com +91 - 9969 353 591

7 What is the relationship between the impulse acting on an object and the change in momentum of the object?

A impulse = change in momentum

B impulse = change in momentum × time

C impulse = $\frac{\text{change in momentum}}{\text{time}}$

D impulse = $\frac{\text{change in momentum}}{\text{mass}}$

8 Electrical energy may be obtained from nuclear fission.

In which order is the energy transferred in this process?

A nuclear fuel → generator → reactor and boiler → turbines

B nuclear fuel → generator → turbines → reactor and boiler

C nuclear fuel → reactor and boiler → generator → turbines

D nuclear fuel → reactor and boiler → turbines → generator

9 A motor of power P exerts a force F on an object. The object moves a distance d during the time t that the force acts.

Which equation is used to calculate the time t?

A $t = \frac{F}{Pd}$ **B** $t = \frac{Fd}{P}$ **C** $t = \frac{Pd}{F}$ **D** $t = \frac{P}{Fd}$

10 A scientist uses an electric motor to lift a load through a vertical distance of 2.0 m.

He then increases the input power to the motor and repeats the experiment. The efficiency of the motor does not change.

Which row correctly describes the effect that this has on the useful work done lifting the load and the time taken to lift it?

	work done	time taken
A	decreases	decreases
B	stays the same	decreases
C	decreases	stays the same
D	stays the same	stays the same

© UCLES 2021
www.root19.com

+91 - 9969 353 391

11 Four containers are filled to the top with the same liquid. The base of each container is circular.

Which container has the greatest pressure exerted by the liquid at its base?

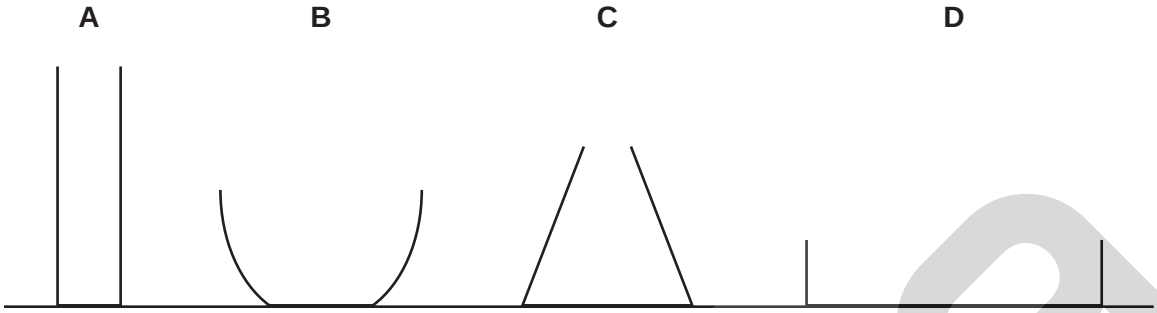

12 A liquid is evaporating. The liquid is not boiling.

Which statement about the liquid is correct at an instant in time?

A Any molecule can escape, and from any part of the liquid.

B Any molecule can escape, but only from the liquid's surface.

C Only molecules with enough energy can escape, and only from the liquid's surface.

D Only molecules with enough energy can escape, but from any part of the liquid.

13 The diagram shows two cylinders connected by a narrow tube fitted with a tap.

One cylinder contains 80 cm^3 of gas at a pressure of 2.0×10^5 Pa. The other cylinder contains a vacuum.

The volume of the evacuated cylinder is 20 cm^3. The tap is opened so that the gas can flow to fill both cylinders.

The temperature of the gas remains constant.

What is the new pressure of the gas?

A 0.50×10^5 Pa

B 1.6×10^5 Pa

C 2.5×10^5 Pa

D 8.0×10^5 Pa

© UCLES 2021
www.root19.com

+91 - 9969 353 591

14 An aluminium block has a mass of 200 g.

The specific heat capacity of aluminium is 900 J / (kg °C).

How much energy is needed to increase the temperature of the block from 20 °C to 110 °C?

A 2.0 J **B** 2000 J **C** 16 200 J **D** 16 200 000 J

15 The diagram shows a liquid-in-glass thermometer.

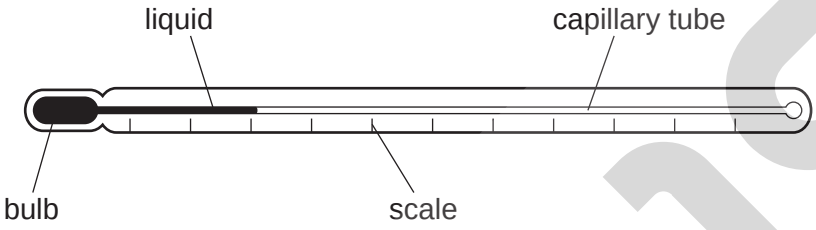

Which change to the design would result in a more sensitive thermometer?

A Increase the density of the liquid.

B Increase the diameter of the capillary tube.

C Increase the number of scale markings.

D Increase the volume of the bulb.

16 The diagram shows a pan used for cooking food.

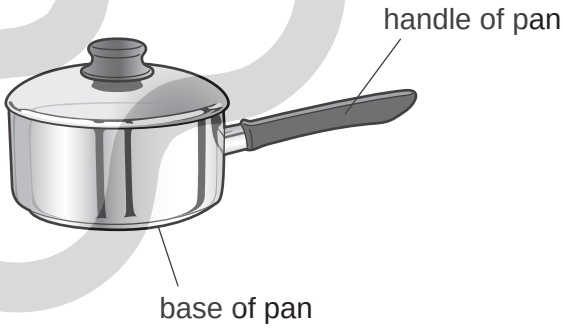

Which row is correct for the materials used to make the base and the handle of the pan?

	base of pan	handle of pan
A	good thermal conductor	good thermal conductor
B	good thermal conductor	poor thermal conductor
C	poor thermal conductor	good thermal conductor
D	poor thermal conductor	poor thermal conductor

© UCLES 2021
www.root19.com

+91 - 9969 353 391

17 The diagram shows waves in a ripple tank containing water.

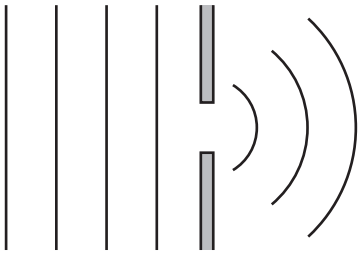

The waves approach a barrier and pass through the gap in the barrier.

The size of the gap is about the same size as the wavelength of the ripples.

The gap size is increased.

What happens to the ripple pattern to the right of the barrier?

A The ripples are closer together.

B The ripples are further apart.

C The ripples are more curved.

D The ripples are less curved.

18 The diagram shows a wave.

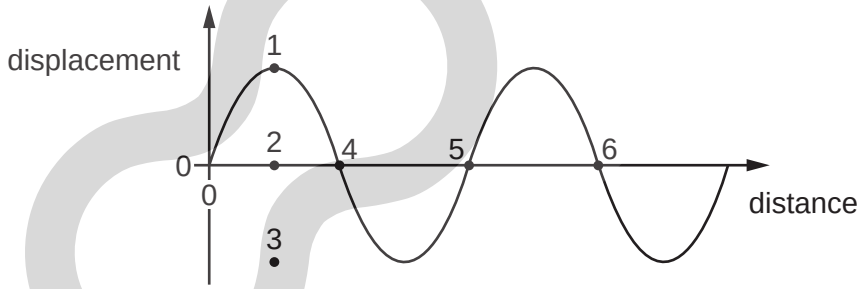

Which row correctly indicates the amplitude and the wavelength of the wave?

	amplitude	wavelength
A	the distance between 1 and 2	the distance between 4 and 5
B	the distance between 1 and 2	the distance between 4 and 6
C	the distance between 1 and 3	the distance between 4 and 5
D	the distance between 1 and 3	the distance between 4 and 6

© UCLES 2021
www.root19.com

+91 - 9969 353 591

19 Two beams of light are both the same colour of red. One beam is travelling through air. The other beam is travelling through water. Each beam has a different brightness.

Which quantity is the same for both sets of waves?

A amplitude

B frequency

C speed

D wavelength

20 The diagram shows a ray of light in air incident on a glass block. Some of the light is refracted and some of the light is reflected. Two angles, *p* and *q*, are marked on the diagram.

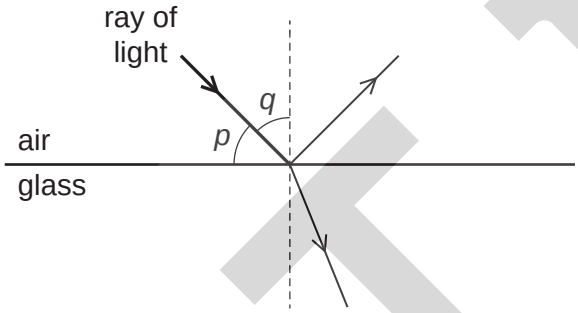

Which row gives the angle of incidence and states whether total internal reflection occurs?

	angle of incidence	total internal reflection
A	*p*	no
B	*p*	yes
C	*q*	no
D	*q*	yes

© UCLES 2021
www.root19.com

+91 - 9969 353 391

21 The diagram shows a ray of light in glass incident on the surface between the glass and air.

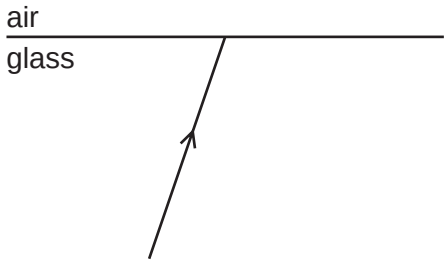

What happens if the angle of incidence is made larger than the critical angle for the glass?

A The angle of refraction becomes equal to 90°.

B There is a refracted ray and a ray reflected inside the glass.

C There is a refracted ray only.

D There is only a ray reflected inside the glass.

22 The Sun emits infrared radiation and light.

Light from the Sun reaches the Earth in 8 minutes.

Which row gives correct information about the infrared radiation?

	wavelength of infrared radiation	time taken for infrared radiation to reach the Earth
A	longer than wavelength of light	8 minutes
B	longer than wavelength of light	much less than 8 minutes
C	shorter than wavelength of light	8 minutes
D	shorter than wavelength of light	much more than 8 minutes

23 Which list shows regions of the electromagnetic spectrum in order of increasing frequency?

A X-ray → ultraviolet → visible light → infrared

B X-ray → infrared → visible light → ultraviolet

C infrared → visible light → ultraviolet → X-ray

D ultraviolet → visible light → infrared → X-ray

24 What is ultrasound?

A sound waves that are so loud that they damage human hearing

B sound waves that are too high-pitched for humans to hear

C sound waves that are too low-pitched for humans to hear

D sound waves that are too quiet for humans to hear

www.root19.com +91 - 9969 353 591

25 An uncharged, metal sphere is placed on an insulating support. A positively charged rod is brought close to the sphere, but does not touch it.

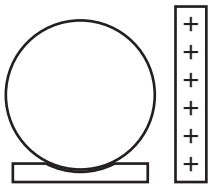

How do the charges in the sphere move and what is now the charge on the sphere?

	movement of charges	charge on sphere
A	negative charges move to the right of the sphere	positive
B	negative charges move to the right of the sphere	neutral
C	positive charges move to the left of the sphere	positive
D	positive charges move to the left of the sphere	neutral

26 In which circuit is the ammeter measuring the flow of charge through the lamp?

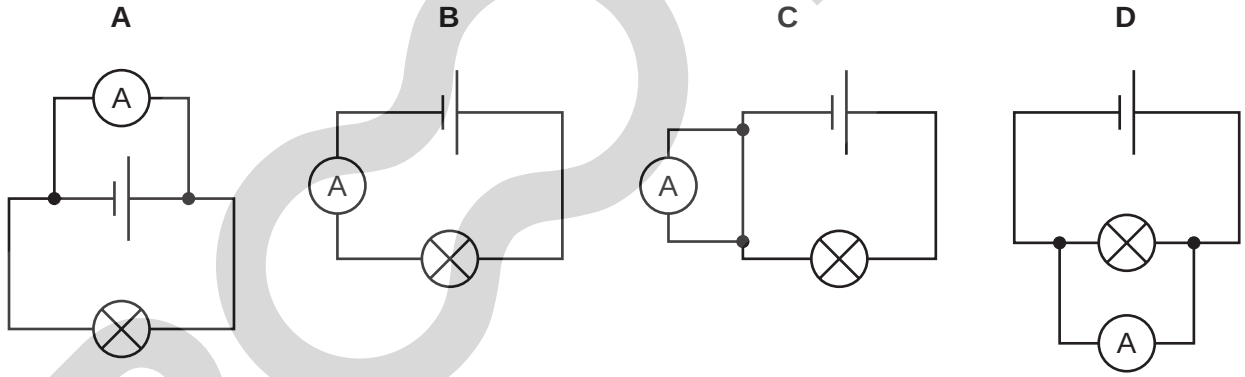

27 A lamp is connected to a cell.

Which circuit diagram shows the direction of conventional current I and also the direction of flow of electrons e?

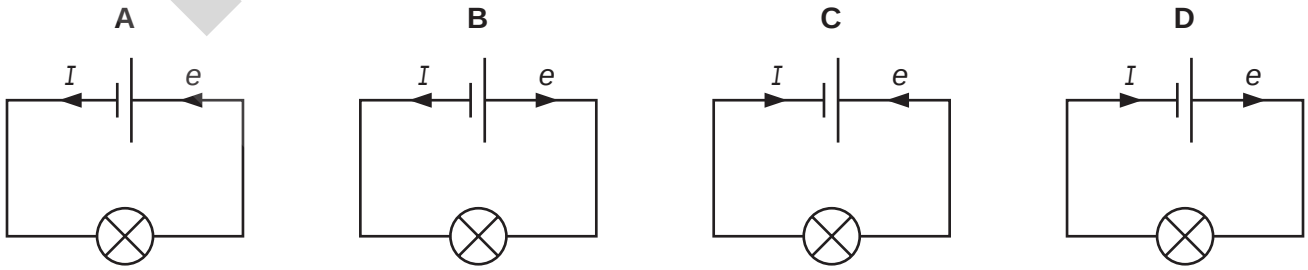

www.root19.com +91 - 9969 353 391

28 The diagram shows a circuit containing two resistors of resistance 1.0 Ω and 2.0 Ω.

A voltmeter is connected across the 1.0 Ω resistor by connecting P to X.

The reading on the voltmeter is 6.0 V.

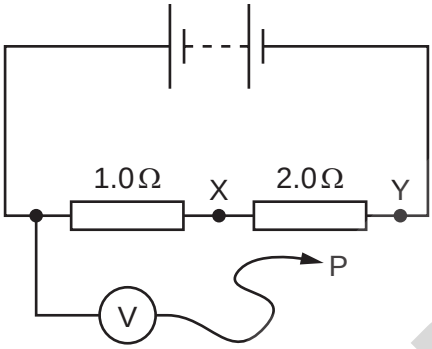

P is moved to point Y in the circuit.

What is the new reading on the voltmeter?

A 3.0 V **B** 6.0 V **C** 12 V **D** 18 V

29 The graph shows the current–voltage relationship for a circuit component X.

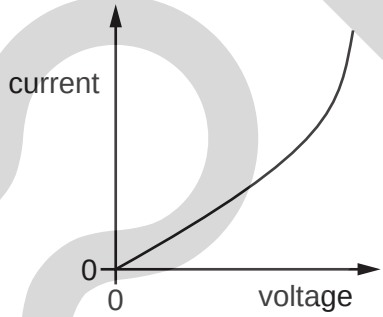

What happens to the resistance of X and what happens to the temperature of X as the voltage increases?

	resistance of X	temperature of X
A	decreases	decreases
B	decreases	increases
C	increases	decreases
D	increases	increases

© UCLES 2021 www.root19.com

+91 - 9969 353 591

30 The diagrams show pairs of circuits containing logic gates.

In which diagram does the lower circuit of the pair behave differently from the upper circuit?

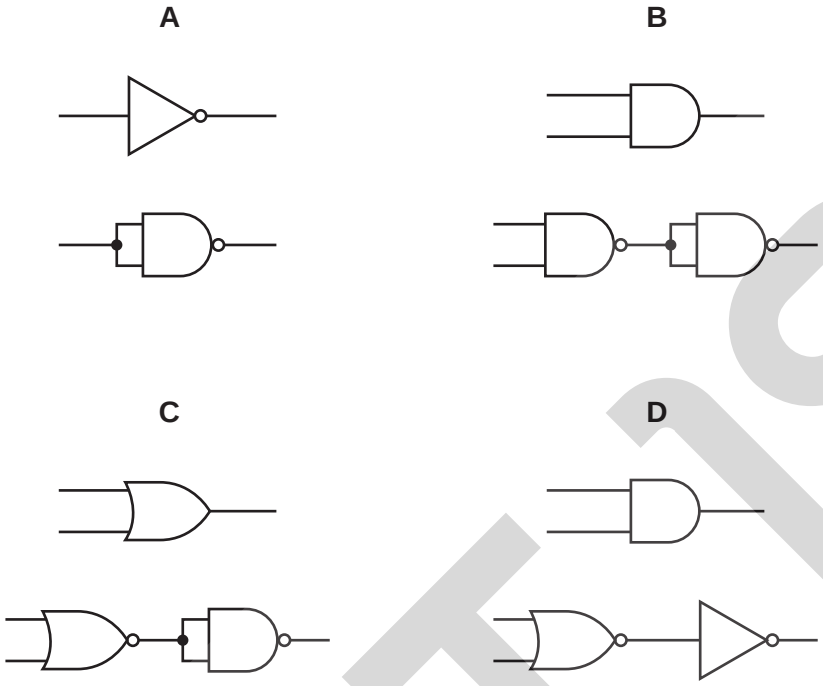

31 In which circuit do both lamps light?

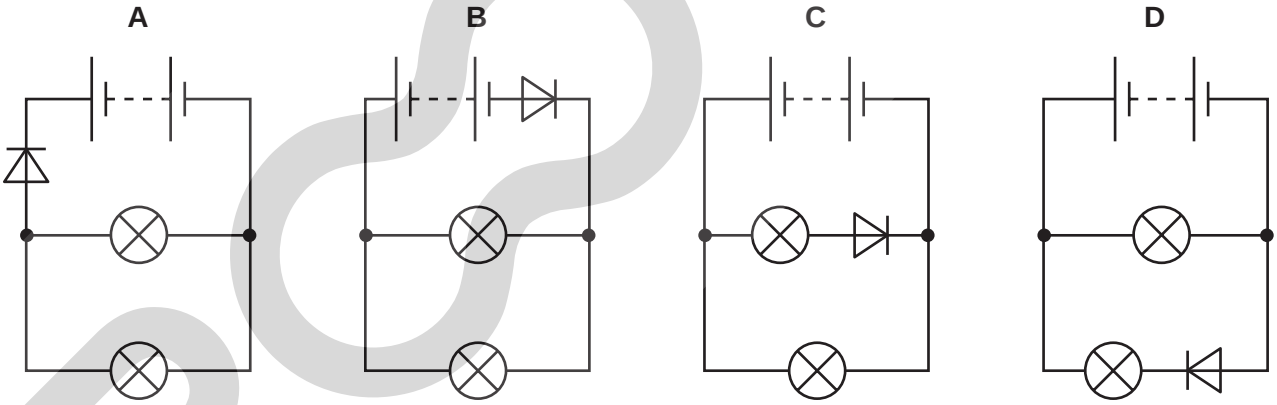

www.root19.com +91 - 9969 353 391

32 Two resistors, with resistances R_1 and R_2, are connected in parallel.

The resistance R_1 is greater than the resistance R_2.

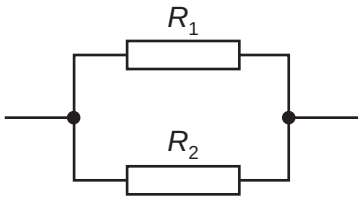

What is the resistance of the parallel combination?

A less than either R_1 or R_2

B equal to R_1

C equal to R_2

D the average of R_1 and R_2

33 The metal cases of electrical appliances are connected to an earth wire.

Which statement is **not** correct?

A The live wire may become loose and touch the metal case.

B If the metal case becomes live, the earth wire conducts current to the ground.

C The earth wire needs to have a high resistance.

D Earthing metal cases helps prevent a person from receiving an electric shock.

34 What is the function of the split-ring commutator in an electric motor with a single rotating coil?

A to enable the motor to function with an a.c. source

B to reverse the current in the coil once every revolution

C to reverse the current in the coil whenever its plane becomes perpendicular to the magnetic field

D to reverse the current in the coil whenever its plane is parallel with the magnetic field

© UCLES 2021
www.root19.com

+91 - 9969 353 591

35 Which graph represents an alternating current (a.c.)?

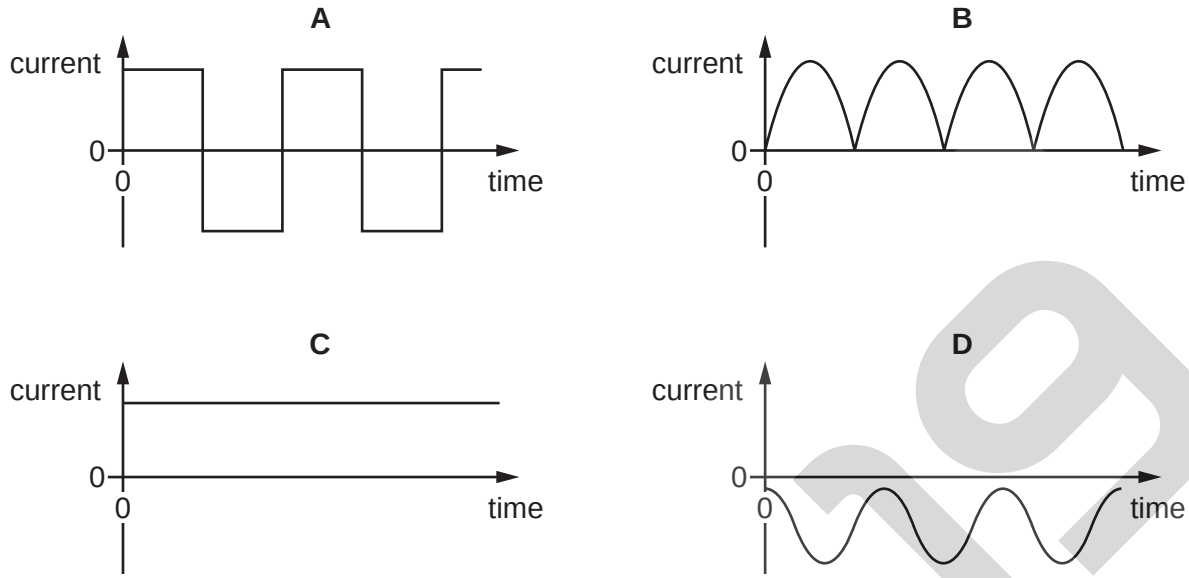

36 The diagrams show a horizontal wire in a magnetic field.

The horizontal wire is firmly held at each end (not shown) and cannot move.

The magnets and holder are on a balance.

When there is no current in the wire, the reading on the balance is 0.35 g.

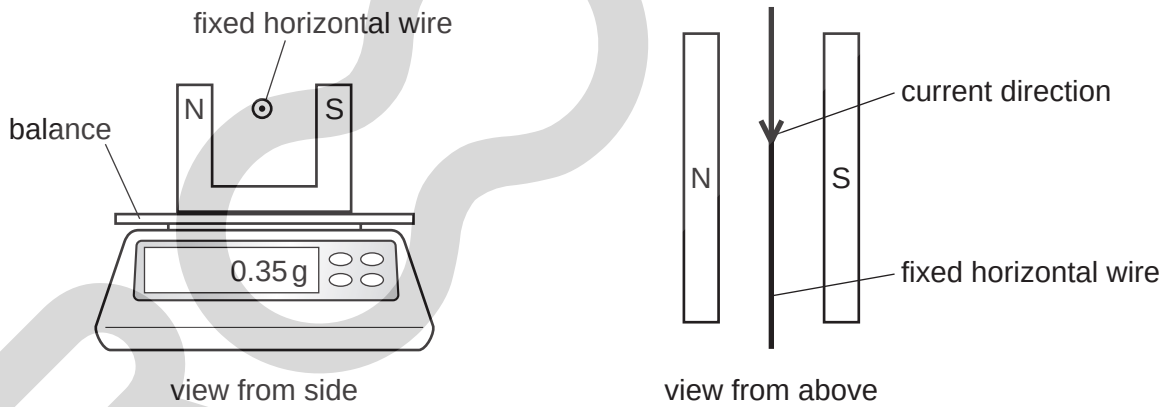

There is a d.c. current in the wire, as shown.

What happens to the reading on the balance?

A smaller than 0.35 g

B no change

C changing from smaller to larger than 0.35 g repeatedly

D larger than 0.35 g

© UCLES 2021
www.root19.com

+91 - 9969 353 391

37 The nucleus of an americium atom contains 146 neutrons and 95 protons. It decays by emitting an α-particle.

How many neutrons and how many protons remain in the nucleus when this form of americium decays?

	number of neutrons remaining	number of protons remaining
A	142	93
B	142	95
C	144	93
D	144	95

38 The graph shows how the count rate measured by a radioactivity detector placed near a radioactive sample changed with time.

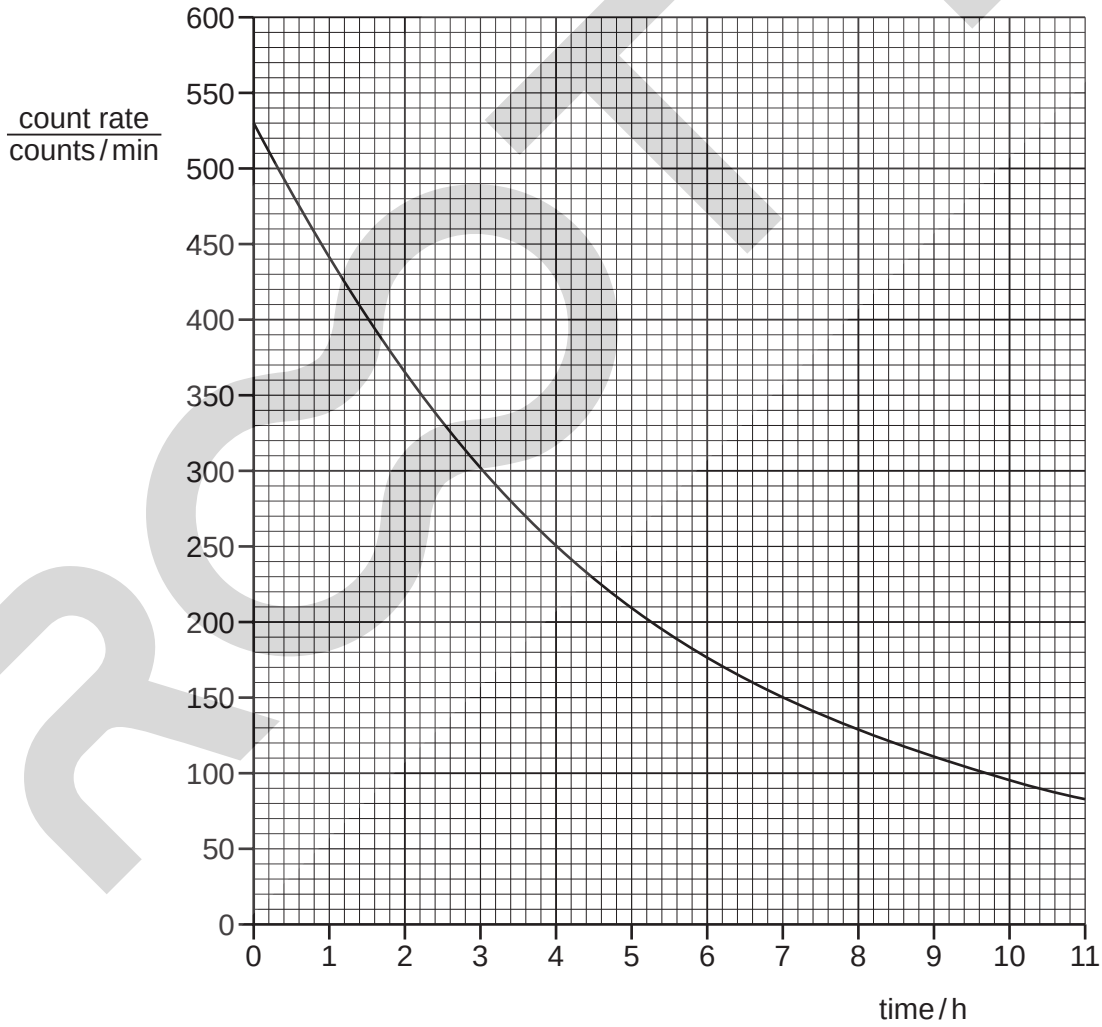

Given that the background count rate is 30 counts / min, what is the half-life of this sample?

A 3.4 h **B** 3.6 h **C** 4.0 h **D** 5.5 h

www.root19.com +91 - 9969 353 591

39 A teacher holds a radioactive source near a detector.

The reading on the detector is 320 counts / min.

The detector is switched on again after the source has been removed and it shows a reading of 20 counts / min.

What is the counts / min solely due to the source and why is there a reading on the detector when there is no radioactive source present?

	counts / min due to the source	reason for reading with no source
A	300	zero error on detector
B	300	background radiation
C	340	zero error on detector
D	340	background radiation

40 Which statement is **not** correct?

A α-particles are used to detect cracks in metallic structures.

B β-particles are used in the measurement of the thickness of paper.

C γ-rays may be used to treat cancer patients.

D Smoke alarms contain a weak source of α-particles.

Permission to reproduce items where third-party owned material protected by copyright is included has been sought and cleared where possible. Every reasonable effort has been made by the publisher (UCLES) to trace copyright holders, but if any items requiring clearance have unwittingly been included, the publisher will be pleased to make amends at the earliest possible opportunity.

To avoid the issue of disclosure of answer-related information to candidates, all copyright acknowledgements are reproduced online in the Cambridge Assessment International Education Copyright Acknowledgements Booklet. This is produced for each series of examinations and is freely available to download at www.cambridgeinternational.org after the live examination series.

Cambridge Assessment International Education is part of the Cambridge Assessment Group. Cambridge Assessment is the brand name of the University of Cambridge Local Examinations Syndicate (UCLES), which itself is a department of the University of Cambridge.